SOUNDING INSTRUMENTS FOR FUTURE RUSSIAN METEOROLOGICAL SATELLITES

A.B.USPENSKY
SRC “PLANETA” Roshydromet, Moscow, Russia

I.V.CHERNY, G.M.CHERNYAVSKY
Center for program studies, Russian Space Agency, Moscow

Yu.M.GOLOVIN, F.S.ZAVELEVICH
Keldysh Research Center, Russian Space Agency, Moscow

A.K.GORODETSKY, B.E.MOSHKIN
Space Research Institute, Russian Academy of Sciences, Moscow

G.G.GORBUNOV
State Optical Institute, St.Peterburg

A.S.ROMANOVSKY
Moscow State Technical University, Moscow

ABSTRACT

The paper describes sounding instruments to be designed as key meteorological payload of Russian next series polar orbiting satellites, METEOR-3M. First sounder is multichannel scanning microwave radiometer, MTVZA; it will be embarked on both forthcoming METEOR-3M №1 (1999) and METEOR-3M №2 (2002) satellites. The second sounder, called IRFS presents the infrared Fourier transform spectrometer and is planned to be fabricated and installed on board METEOR-3M №2 as experimental instrument. The primary mission objective of MTVZA/IRFS sounding system is provision of information on 3D thermal and moisture structure of the atmosphere.

1. INTRODUCTION

Russia is continuing the efforts on development and modernization of national polar orbiting meteorological satellite system METEOR. According to present planning of Russian Space Agency (RSA) in 1999 and in 2002 the operations should be started with next generation satellites of METEOR series - METEOR-3M №1 and METEOR-3M №2, see Table 1. These satellites will be launched on sun - synchronized orbit and will have improved radio downlink. The lack of modern sounding instruments on board former METEOR satellites stimulated the works on design and building up the advanced microwave (MW) and infrared (IR) sounders. The primary rationale for the development of this suite of instruments is to provide information on:

- atmospheric temperature and water vapor profiles in the troposphere and temperature profiles in lower stratosphere;
- cloud cover parameters.

The secondary mission objectives are the derivation of:

- sea and land surface temperatures;
- total amount of ozone and some information about the vertical distribution;
- total column amount of tropospheric trace gases CH_4, N_2O, CO;
- optical depth of atmospheric aerosol and some information about the vertical distribution.

Current remote temperature sounding system is based on the combination of broad band filter wheel radiometers and MW radiometers with limited number of channels. It is well recognized now that considerable improvements are needed in the vertical resolution and accuracy of satellite sounding observations. Vertical resolution of present soundings is insufficient to resolve the detailed thermodynamic structure of the atmosphere. To meet WMO requirements on temperature and humidity soundings (WMO Sat. reports, 1998) the advanced IR and MW sounders are needed in low orbit satellite. A limiting constraint in the vertical resolution of temperature and humidity retrievals is the width of weighting functions relating to sounder channels. More narrow weighting functions can be obtained if to perform measurements with high spectral resolution instrument. That's why the efforts are continued to design a high spectral resolution IR sounders that will be launched during the early part of the next century. The AIRS instrument (Aumann, 1994) has been built by NASA in course of EOS Program and will be launched together with AMSU instrument aboard PM-1 in 2000. Such all-weather sounding system should provide temperature and humidity profiles with improved vertical resolution and accuracy (Huang, 1997). Furthermore the studies are being undertaken to design in frame of U.S. IPO the Cross-track Interferometer Sounder (CrIS) as a key payload of the future NPOESS (Smith, 1998). In Europe the Infrared Atmospheric Sounding Interferometer (IASI) being jointly developed by CNES and EUMETSAT is scheduled for launch aboard EPS METOP in 2003 (Phulpin, 1997). Synergistic use IASI and companion MW sounders AMSU, MHS will permit to meet WMO requirements on vertical resolution and accuracy of temperature and humidity soundings.

2. METEOR-3M SOUNDING CAPABILITIES

During last 6 years the team led by Keldysh Research Center, RSA, has been engaged in the design and fabrication of multi-purpose Fourier transform spectrometer; one such instrument called IRFS is planned to be installed on board METEOR-3M №2, the second one is scheduled for launch aboard Russian part of the ISS Alpha.

The spectral resolution requirements were formulated starting from the primary mission objective, i.e. the provision of data on atmospheric temperature and humidity profiles. As has been demonstrated in many studies the use of radiance spectra observations with spectral resolution better than 0.5 cm^{-1} (after apodization) in the 15 and 4.3 μm CO_2 absorption bands and noise of 0.1 $mW/(cm^2 \cdot sr\ cm^{-1})$ will allow to meet WMO requirements on vertical resolution and accuracy of temperature (1 km, 1K) and humidity (1-2 km, 10 %)retrievals in troposphere. The preliminary assessment of information content for AIRS and IASI instruments, as specified, has shown that these sounders will be able to yield 13-19 and 7-10 independent pieces of information for atmospheric temperature and water vapour respectively (Huang, 1997). It means that the primary mission objectives of AIRS, IASI like instruments as well as the WMO requirements regarding atmospheric temperature, humidity retrievals will be achieved. As for secondary mission objectives regarding sea and land surface skin temperature derivation in cloud-free conditions it has also been demonstrated that advanced IR sounders with spectral resolution specified for AIRS, IASI, will permit to attain the WMO accuracy requirements (in the range 0.3-1.0K), see (Nally, 1997; Uspensky, 1999b). The preliminary evaluation has shown that it is possible to derive trace gas column amounts (CO, N_2O, CH_4) from IASI like measurements with accuracy better than 10 % in cloudfree troposphere (Uspensky, 1999a).

Basing on described theoretical assessments of advanced IR sounders information content with respect to various geophysical parameters it was decided to design the spacecraft IRFS instrument having two regimes: one provides spectral resolution of 0.5 cm^{-1} (unapodised) and second (experimental mode) provides resolution of 0.1-0.2cm^{-1}. Furthermore in order to increase sounding capabilities with respect to water vapour and aerosol, the IRFS useful spectral range will extend from 2μm (5000 cm^{-1}) up to 4.5μm (2220cm^{-1}) and from 5μm up to 16 μm, see Table 2. The measurements in the short wave band 2.0-4.5μm , where the solar backscatter begins to contribute, are of special interest for retrieval of water vapor total content and vertical profiles (2.0-2,5μm) as well as for derivation of atmospheric aerosol (2.01-2.06 μm). The principal IRFS sounding capabilities are summarized in table 3.

To provide all-weather sounding capabilities, the MW sounder MTVZA is scheduled for launch aboard forthcoming METEOR 3M N1. MTVZA operating frequencies are located both in the transparent windows of 19, 33, 36.5, 42, 48, 91.65 GHz and in absorbing lines of oxygen 52 - 57 GHz and water vapor 22.235 and 183.31 GHz. The instrument will provide information on atmosphere temperature and water vapor profiles similar to AMSU. In addition, the MTVZA includes some complementary non-typical operating frequencies especially for oceanographic research (Cherny, 1998).

Microwave radiometry is traditionally used for derivation of atmosphere and ocean surface geophysical parameters. Nevertheless, the majority of the processes on the ocean surface are related in one or another way to the state of the deep water layers, even if the surface phenomena occur under direct atmospheric influence. It is valid mostly for anomalous states of the surface. Presently, a very important problem is to develop spaceborne observing technique which could "look into" the ocean depths. The physical background for this is following. The ocean is a thermodynamically non-equilibrium medium due to the presence of temperature and salinity gradients which form the ocean thermohaline fine-structure. Therefore, the favorable conditions could arise for amplification of the deep sea processes influence onto the surface at the expense of accumulated oceanic energy, which can be detected by microwave radiometer. The most effective frequency band for detecting the mentioned phenomena extends approximately from 30 up to 90 GHz. The proposed approach for microwave remote sensing of ocean is based on the amplification mechanism concept and analysis of experimental data obtained in north-western Pacific by means of MTVZA prototype, flown on research aircraft. Some experimental results for microwave diagnostics of the active ocean layer processes such as frontal zone of Kuroshio current, synoptic oceanic ring consisted of two coupled eddies of opposite sign (Rossby Soliton), tropical cyclone interaction with the ocean are discussed in (Cherny, 1998b).

3. IRFS INSTRUMENT DESIGN, BASIC PRINCIPLES AND PERFORMANCES

The IRFS instrument assembly includes optical unit, data processing and control system and microcryogen cooling system. The optical unit is separated into several modules: interferometric module, pointing module, calibration module, buffer module. The schematic representation of the IRFS instrument is shown in fig. 1. The mass of instrument is 100 kg, the mean power is 150 W. The basic IRFS units and modules are described below in outline. Further details are available through the IRFS developers.

3.1 Interferometric module (IM).

IM includes interferometer of double pendulum type and radiometer, with two channels: short-wave (SWC) and long-wave (LWC). The optical scheme of the module is given in fig.2. The beam of radiation passes through exit window plate 1 and is splitted by beamsplitter 2 with the compensating plate 3 in two parts, which are getting to cube-corner reflectors 4. After secondary passage through beamsplitter these beams interfere and get on a dichroic plate 8. Long-wave radiation passes through it to objective 5, that focuses radiation on the detector 13; the short-wave radiation is reflected by the plate 8 and after a mirror 9 gets into objective 6 and further on detector 7. The objectives 5 and 6 consist of several lenses with high aperture ratio and have a short focal length. The laser 11 is used as a source of light for a reference channel. Besides that there is a lot of auxiliary components like the detector 12 for reference channel etc. The detectors are basically intended to record the interferograms in SWC and LWC. Each of SWC, LWC detectors is constituted of 2 concentric circular elements MTC (CdHgTe), one inside the other. The cooling of detectors is provided by cryogen cooling system. Basic technical characteristics of detectors are given in Table 4. The signal-to-noise ratio is in the range 600-1200 for 15 μm CO_2 absorbption band and spectral resolution of 0.5 sm^{-1}.

3.2 Module of in-flight calibration (MIC)

MIC is intended for periodic calibration of the instrument. It consists of two targets - stable sources of radiation, each with known spectrum. Short-wave source contains the white diffuse screen from dim aluminum, illuminated by filament lamp about 15 W power with a sapphire window. Calibration source for the LWC is a massive graphite disk with rib surface covered by paint, having high degree of blackness in IR spectral range. Disk temperature is measured in 4-th points by platinum resistance thermometers with the error not worse than 0.1K. The target emissivity is in the range 0.992-0.996.

3.3 Pointing Module (PM)

This module is mounted before the inlet window of Interferometric Module. PM intends for pointing the instrument field of view on pre-defined points of Earth surface across the spacecraft trace and also on the calibration module, which is mounted on the PM frame and used for on-board calibrations of the instrument. PM has a flat gilded mirror, mounted under 45° to its rotation axis, which coincides with the optical axis of the Interferometric Module. The mirror is able to rotate around this axis at 360° by means of stepper motor. Accuracy of the mirror angular position is equal 3 mrad, or ¼ of FOV. Another stepper motor is able to incline the mirror along the trace in the range of ±2° by 0.3 mrad steps for obviating the smear, which is a result of the spacecraft moving.

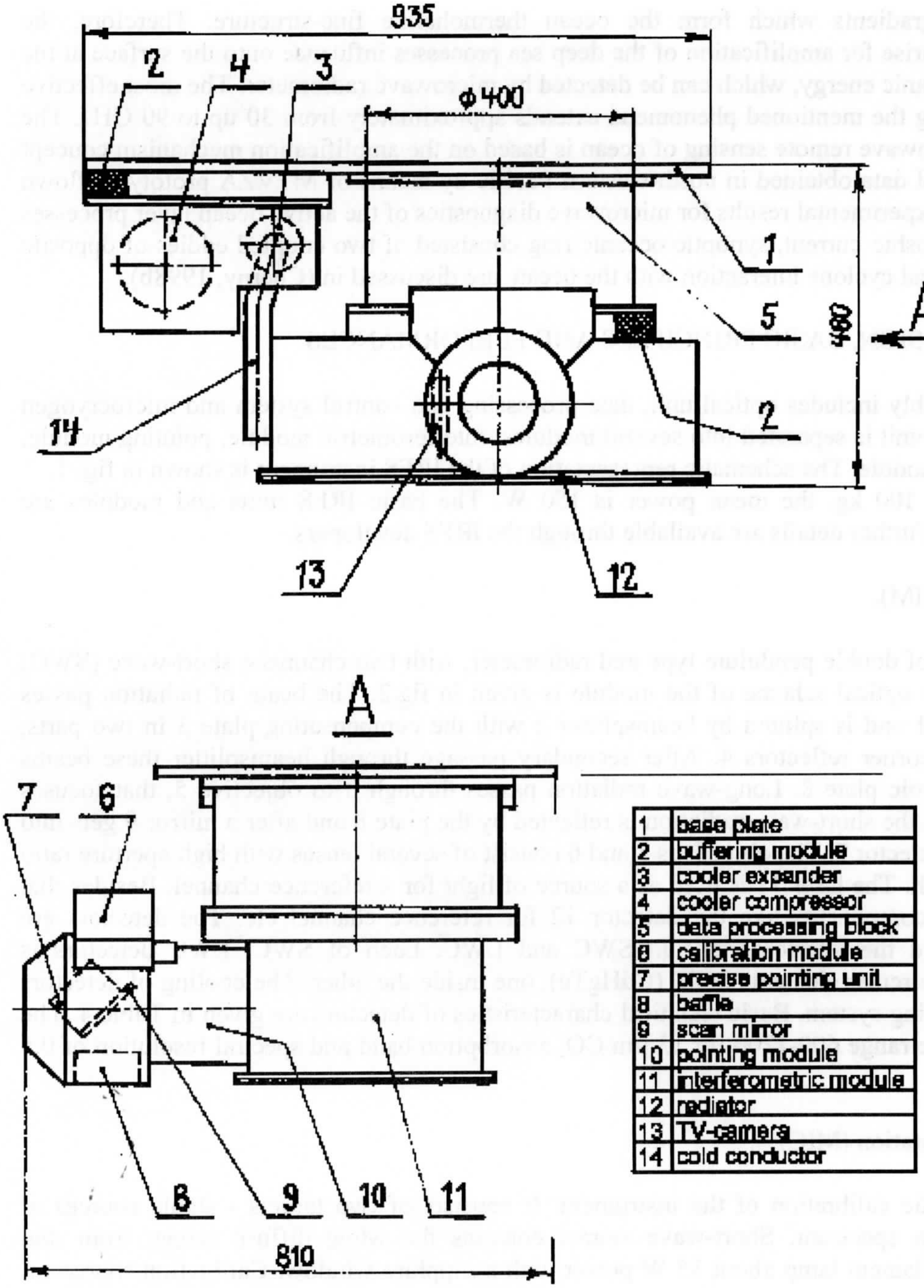

1	base plate
2	buffering module
3	cooler expander
4	cooler compressor
5	data processing block
6	calibration module
7	precise pointing unit
8	baffle
9	scan mirror
10	pointing module
11	interferometric module
12	radiator
13	TV-camera
14	cold conductor

Fig.1. The IRFS instrument

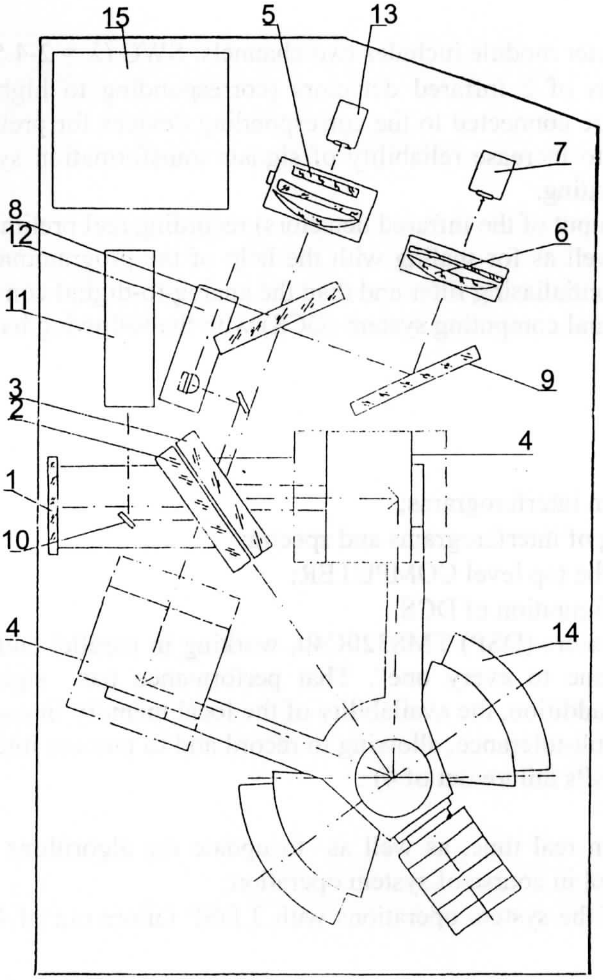

Fig. 2 Optical layout of the interferometric module.

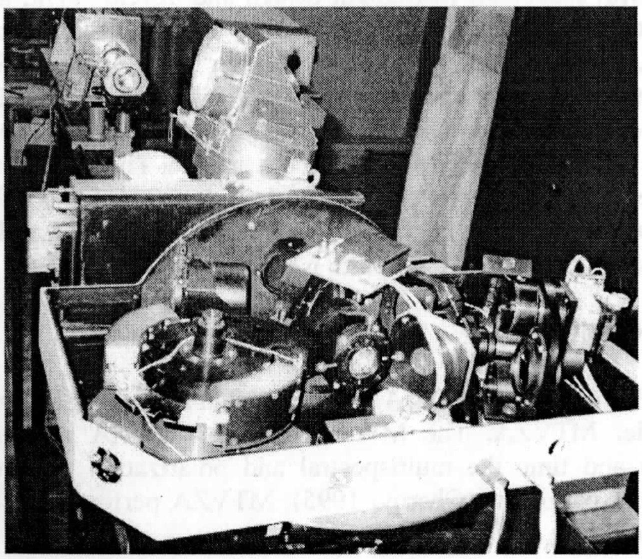

Fig.3 Experimental model of the interferometric module.

3.4 Block of processing and control (BPC)

The electrical circuit of the interferometer module includes two channels: SWC (λ = 2-4.5 μm) and LWC (λ = 5-15 μm), where each one consists of 2 infrared detectors (corresponding to high and low spectral resolution). Infrared detector outputs are connected to the corresponding devices for preliminary processing and transformation (DPPT). In order to increase reliability of signals transformation system, 2 DPPT are used on each detector: basic and duplicating.

DPPT is designed for analog signal (output of the infrared detectors) recording and preliminary amplification by using the low noise amplifier, as well as for scaling with the help of the programmable gain amplifier; further the filtration is made using the antialiasing filter and than the analog-to-digital converter is applied.

One of BPC key components is the digital computing system (DCS) with the following basic functions:

- Registration of interferograms;
- Mirrors moving drive control;
- Pointing system drive control;
- Thermoregulation system control;
- Real time calculation of spectra from interferograms;
- Decimation, selection and archiving of interferograms and spectra;
- Data and command exchange with the top level COMPUTER;
- Periodic self-diagnostics and reconfiguration of DCS.

DCS consists of 4 digital signal processors (DSP) TMS320C40, working in parallel and interconnected by COM-ports, using principle “every one to every one”. That performance has significant reserve on efficiency (approximately 8 times). In addition, the availability of the local memory in each DSP and global memory for all DSPs raises systems fault-tolerance, allowing to record and to process interferograms in case of DSP partial degradation (even 3 DSPs failure out of 4) .

The advantages of DCS design are:

- Ability to process interferograms in real time, as well as to update the algorithms for interferograms processing and interferometer control in course of system operation;
- Fault tolerance, i.e. continuation of the system operations with 3 DSP failure out of 4, and 2 controllers out of 3.

In 1997 the experimental model of IRFS instrument (called INFRAGLOB) has been fabricated (fig.3). As opposed to the in-flight instrument the experimental sample has no cooling system. The detectors are placed into cryostat with liquid nitrogen. The processing of measurement data is made using PC-based simplified DCS. In order to gain experience with spacecraft instrument design and development, as well as to check efficiency of various modules and to determine the characteristics of instrument the laboratory testing was performed. The example of INFRAGLOB laboratory test data is given in fig 4. Here the fragment of CH_4 absorption spectrum (measured for the absorption mass of 1 atm - cm with pressure of 0.1 atm, top panel) is compared to respective spectroscopic data from GEISA database (bottom panel). The intercomparison demonstrates quite good agreement between the line spacing of both spectra. The systematic shift that equals approximately 0.7 cm^{-1} can be corrected using special processing algorithm. The full width at half maximum (FWHM) of absorption lines, marked at top panel of fig 4., equals 0.2 cm^{-1} and is actually the same as the FWHM of spectral response function since Lorentz half width is small (~0.01 cm^{-1} for 0.1 atm pressure).

4. MTVZA INSTRUMENT DESCRIPTION

In 1998 the team led by Center for Program Studies, RSA, has completed the design and building up the first sample of spaceborne MW sounder MTVZA. The MW radiometer MTVZA design is based on the technology of combining in space and time the multispectral and polarization measurements, that was developed and tested in the aircraft experiments (Cherny, 1995). MTVZA performance characteristics and frequency channel characteristics are shown in Tables 5, 6.

All radiometer channels of MTVZA are switched to single feed-horn antenna, see Fig.1 in (Cherny, 1998a). The total-power radiometer configuration is employed which provides a factor of two greater sensitivity over a conventional “Dicke” switched system. The channels of 19-48 GHz are the direct amplification radiometers. The channels of 52-57, 91 and 183 GHz are built as superhetherodyne receivers using balanced mixers. The receivers noise temperature are given in (Cherny 1998a). The MTVZA antenna system consists

TABLE 3. IRFS sounding capabilities

Geophysical parameter	Accuracy	Vertical resolution	Note
Temperature profile	1K	1 km (low troposphere)	cloud-free conditions
Water vapor profile	10%	1-2 km (low troposphere)	cloud-free conditions
Aerosol optical depth	20%	column	cloud-free conditions
CH_4, N_2O, O_3 total amount	5-10%	column	cloud-free conditions
sea surface temperature	0,5K		cloud-free conditions
Land surface temperature	1,0K		cloud-free conditions
Cloud top height	0,5km		
Dominant phase in clouds (water, ice)			

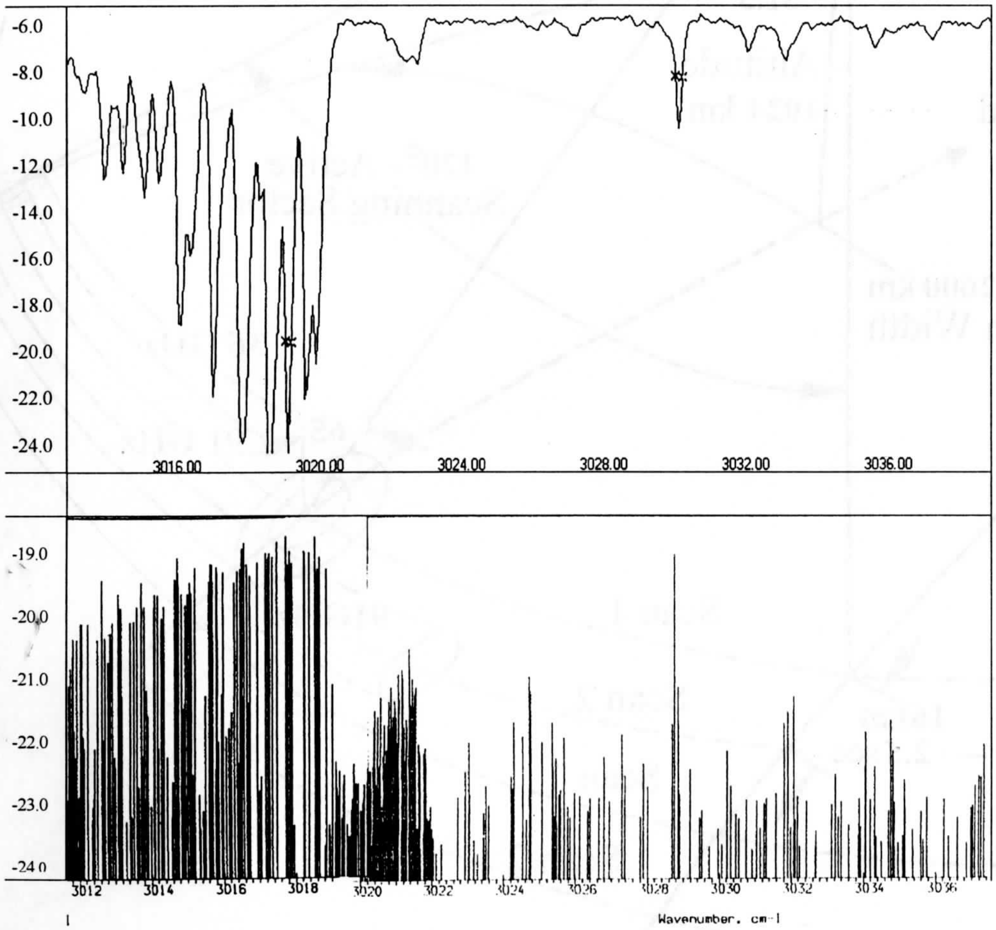

Fig. 3.Measured (top panel) and calculated (bottom) CH_4 absorption spectra

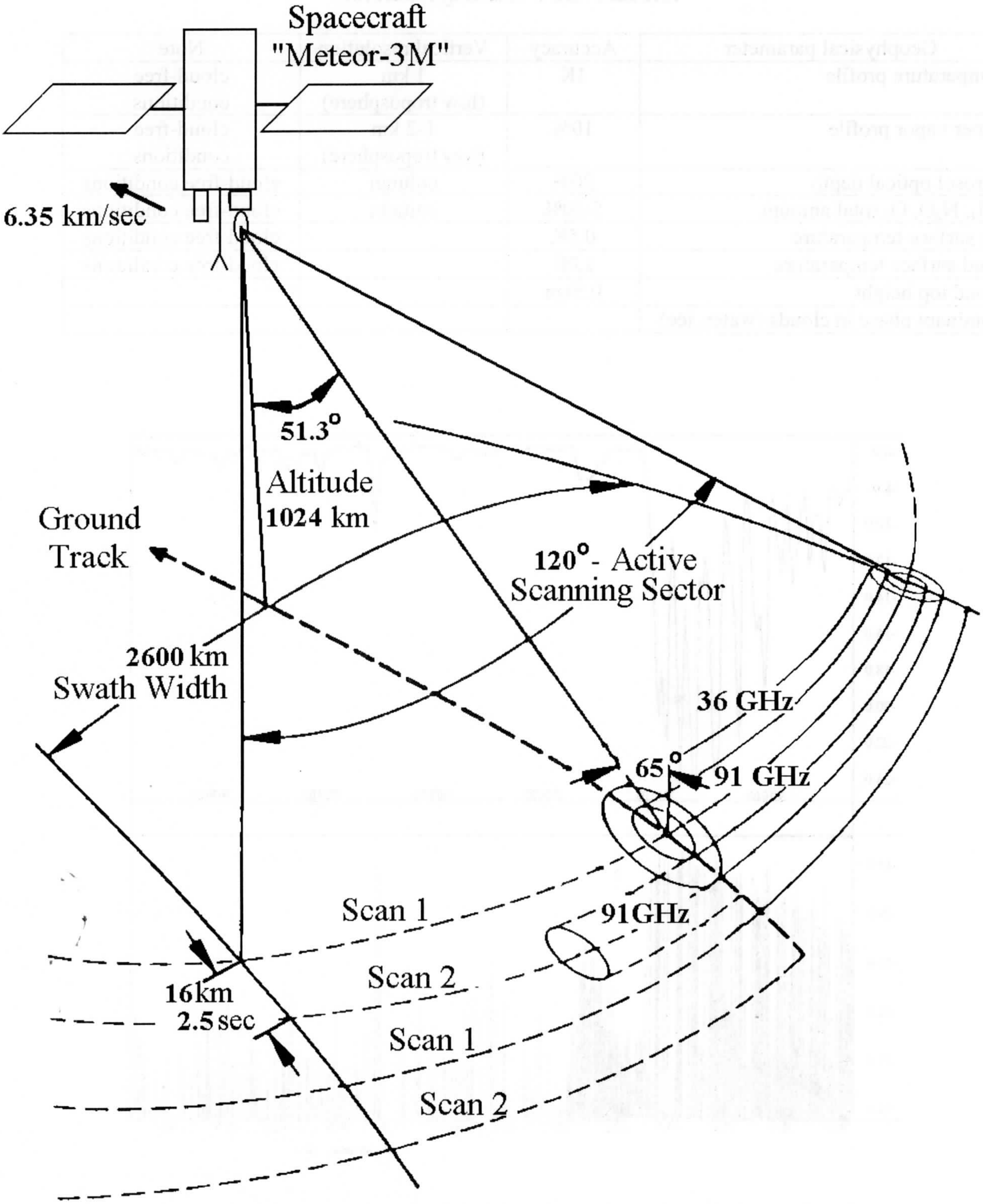

Fig.5. MTVZA scanning geometry

of offset parabolic reflector of dimensions 50 x 65 cm, illuminated by broad-band, eleven-port feed-horn antenna through the flat mirror. The two-mirror antenna system configuration is due to the instrument deploying in the down part of spacecraft. To remain the invariant of viewing angle and polarization in scanning sector the reflector, flat mirror and feed-horn antenna are mounted on a drum, containing the radiometers, digital data subsystem, power and signal transfer assembly, which rotates continuously round an axis parallel to the local spacecraft vertical. The power, commands, all data, timing and telemetry signals pass through slip ring connectors to the rotating assembly.

For calibration the hot and cold reference targets are used. They are mounted on the non-rotating part of instrument and are positioned such that they pass between the feed-horn and flat mirror, occulting the feed-horn once each scan. The temperature difference between hot and cold target is expected to be equal 60-70 K.

The MTVZA will rotate continuously about an axis parallel to the local spacecraft vertical with a period of 2.52 s during which the subsatellite point, moving at 6.35 km/s, travels 16 km. The instrument is a conical scanning device and it looks backward (Fig. 5). The viewing angle is 51.3° and the incidence angle with respect to the Earth surface - 65°. The sampling resolution is expected to be 16 km for channels of 91.6 GHz and 183 GHz, and 32 km for other channels both in the cross-track and along-track direction. The scan direction will be from the left to the right when looking in the aft direction of the spacecraft, with the active scanning sector lying 120° about the aft direction, resulting in a swath width of 2600 km. This will result in the 12 hours global coverage for one satellite. Only regions of about 300 km width will be missed near equator, which will be covered after 24 hours.

5. Acknowledgements.

Our appreciation to I. Egorova and A. Koukharsky, from SRC PLANETA, for help in preparing this manuscript.

References

Aumann H.H., R.Pagano, 1994: The Atmospheric Infrared Sounder on EOS. Opt.Eng., 32, 776-784.

Cherny I.V., A.M.Alesin, N.N.Gorobetz, et al.,1995: Advanced airborne multispectral mm-wave imaging technique for ocean and atmosphere studies. Proc. of CO-MEAS'95 Symposium, Atlanta, Georgia, April, 1995.

Cherny I.V., Chernyavsky G.M., N.N.Gorobetz et al., 1998a: Satellite “Meteor-3M” Microwave Radiometer MTVZA. Proc. of IGARSS’98 Symp., Seatle, WA, 6-10 July 1998.

Cherny I.V. and V.Yu.Raizer,1998b: Passive microwave remote sensing of oceans. Wiley-Praxis, Chichester, 195p.

Hung-Lung Huang, W.L.Smith and M.S.Whipple, 1997: The prospects for high spectral resolution next generation observing systems: how useful are they? IRS’96. Current problems in atmospheric radiation. W.L.Smith and K.Stamnes Eds. A Deepak Publishing, 561-565.

Nally N.R., W.L. Smith, 1998: Improved remote sensing of sea surface skin temperature using a physical retrieval method. J. Geophys. Res., 103, C5, 10527-10542.

Phulpin T. et al., 1997: A new generation atmospheric sounder for the Eumetsat polar system. Tech.Proc. 9th Int. TOVS Study Conf., Igls, Austria, 20-26.02.1977, 375-385.

Smith W.L., 1998: Satellite remote sounding - the evolution of a global observing system. Remote sounding lecture of the AMS. Proc. 9th Conf. on sat. meteor. and oceanography Paris, Unesco, 23-29.05.1998, AMS, v.1, 1-4.

Uspensky A.B. et al., 1999: The prospects for remote sounding of trace gas column amounts and profiles from high spectral resolution IR radiance measurements. This issue.

Uspensky A.B. et. al., 1999a: Derivation of surface skin temperature from high spectral resolution IR radiance measurements. J. Earth Research from Space, accepted for publication.

WMO Satellite Reports. Preliminary statement of guidance regarding how well satellite capabilities meet WMO requirements in several application areas. SAT-21. WMO/TD N 913, 1998, 66 p.

Table 1. Orbit Parameters for METEOR-3M Spacecrafts

Spacecraft	Launch Date	Inclination (deg.)	Altitude (km)	Period (min)	Ascending Equator Crossing Time (Local)
METEOR-3M, No.1	Sept. 1999	99.6	1024	105.3	09.15
METEOR-3M, No.2	Aug. 2002	99.6	1024	105.3	10.30 (16.30)

TABLE 2. BASIC PARAMETERS OF IFRS

N	PARAMETER	UNITS	SWC*	LWC*
1	Spectral range Wavelength Wavenumber	 μm cm^{-1}	 2-4.5 5000-2200	 5-16 2000-625
2	Wavelength of the reference channel	μm	1.63	1.063
3	Maximum optical path difference resolution 0.1 cm^{-1} resolution 0.5 cm^{-1}	 mm mm	 64 13	 64 13
4	Spatial resolution (orbit altitude = 1000 km) foot print 0.1 cm^{-1} 0.5 cm^{-1}	 km km	 14 24	 25 40
5	Time of the interferogram measurement resolution 0.1 cm^{-1} resolution 0.5 cm^{-1}	 sec sec	 4 0.8	 4 0.8
6	Dynamic range		2^{18}	2^{16}
7	Mass	kg	100	
8	Dimensions	mm	935 x 810 x 480	
9	Power	W	150	

*SWC – short wave channel;
*LWC – long wave channel.

TABLE 4. Technical characteristics of detectors

Channels	SWC	LWC
Spectral regiom, mkm	2—4.5	5—15
Number of detectors	2	2
Wavelength of maximal spectral response, mkm	4±0.2	14.5±0.5
Detector dimensions (diameter), mm	1.5, 0.8	1.9, 1.1
Operating temperature, K	77±3	77±3
Detector angle aperture, grad	48	65
Window material & anti-reflecting coating	Ge	Ge
Detectivity, sm*Hz$^{1/2}$*W^{-1}	1*10^{11}	1*10^{10}
Input sensitivity, V/W	3*10^{3}	3*10^{3}

Table 5. MTVZA Performance Characteristics

Frequency (GHz)	19	22.2	33	36.5	42.0	48	52-57	91.6	183
Polarization V/ H	V, H	V	V, H	V, H	V, H	V, H		V,H	
Spatial Resolution (km)	75	68	45	41	36	32	30	18	12
Circular Conical Scanning Period (sec)	2.52								
Viewing Angle (deg.)	51.3								
Incident Angle (deg.)	65								
Swath Width (km)	2600								
Weigh (kg)	80								
Power Consume (W)	90								

Table 6. MTVZA Frequency Channel Characteristics

Channel No.	Center Frequency (GHz)	No. of Pass Bands	Band-Width (MHz)	Approximate Peak Sensitivity Altitude, km
1	19	1	1000	-
2	22.235	1	1000	-
3	33	1	2000	-
4	36.5	1	2000	-
5	42	1	2000	-
6	48	1	2000	-
7	52.28	1	400	2
8	52.85	1	300	4
9	53.33	1	300	6
10	54.40	1	400	10
11	55.45	1	400	14
12	56.9682 ± 0.1	2	50	20
13	56.9682 ±0.05	2	20	25
14	56.9682 ±0.025	2	10	29
15	56.9682 ±0.01	2	5	35
16	56.9682 ±0.005	2	3	40
17	91.65	2	3000	surface
18	183.31 ± 7.0	2	1500	1.5
19	183.31 ± 3.0	2	1000	2.9
20	183.31 ± 1.0	2	500	5.3

TECHNICAL PROCEEDINGS OF THE TENTH INTERNATIONAL ATOVS STUDY CONFERENCE

Boulder, Colorado

27 January - 2 February 1999

Edited by

J. Le Marshall and J.D. Jasper

Bureau of Meteorology Research Centre, Melbourne, Australia

Published by

Bureau of Meteorology Research Centre

PO Box 1289K, GPO Melbourne, Vic., 3001, Australia

December 1999